15ND930

15in Low Frequency Speaker

Features

- 3in Voicecoil
- High Sensitivity
- Neodymium Magnet
- Advanced Cooling System



Specifications	
Nominal Diameter	390mm (15in)
Nominal Power (AES)[1]	450W
Program Power[2]	900W
Sensitivity (1W/1m)[3]	99dB
Voice Coil Diameter	76mm (3in)
Magnet Material	Neodymium
Nominal Impedance	8Ω
Frequency Range	44 - 2200Hz

Thiele & Small Parameters	
Fs	43Hz
Qes	0.32
Qts	0.31
Qms	7.5
Re	5.7Ω
Sd	855cm^2
Vas	138L
BL	20.6Tm
Mms	98g
Cms	0.13mm/N
Le (1kHz)	0.89mH
Xmax (lin.)[4]	±5mm

Mounting Information	
Overall Diameter	393mm
Mounting Holes Diameter	8 - 8mm x 6mm
Bolt Circle Diameter	370mm
Baffle Cutout	348mm
Overall Depth	177mm
Net Weight	4.4kg

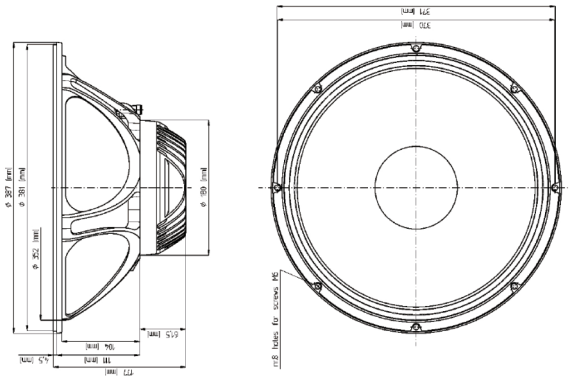

Frequency response measured with quasi-infinite baffle

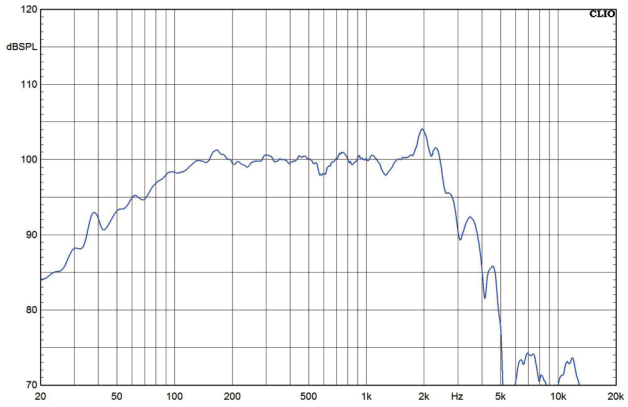

Impedance for 8Ω driver

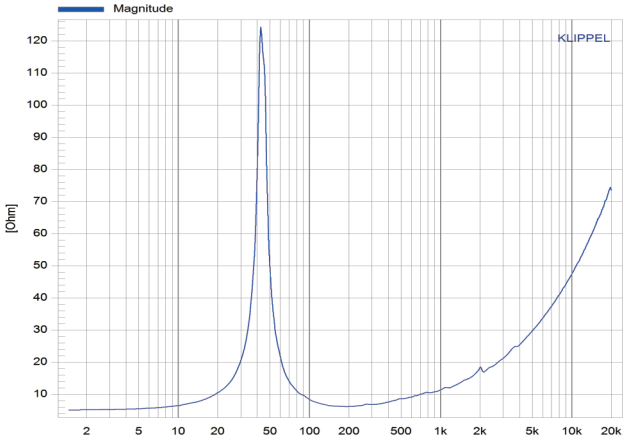

Notes: 1 2 hours test with pink noise (6dB crest) between Fs and 10Fs. Power calculated on rated minimum impedance.
2 Program Power is defined as 3dB greater than the AES Power.
3 RMS Voltage set to 2.83V at nominal impedance.
4 Xmax is defined as (Hc - Hg)/2.

SUB | **LOW** | MID | HIGH | COAX | HORN